Jidé
100% MADE IN BELGIUM
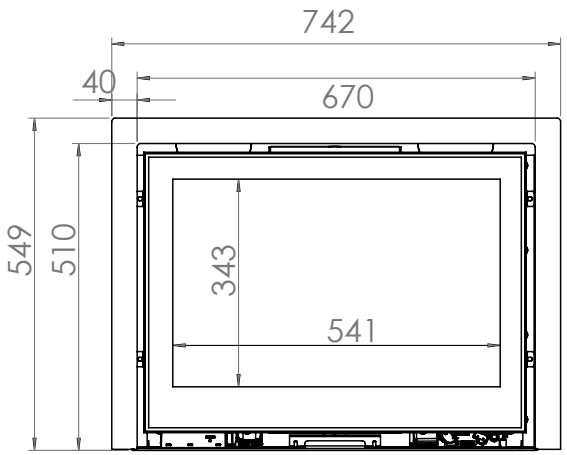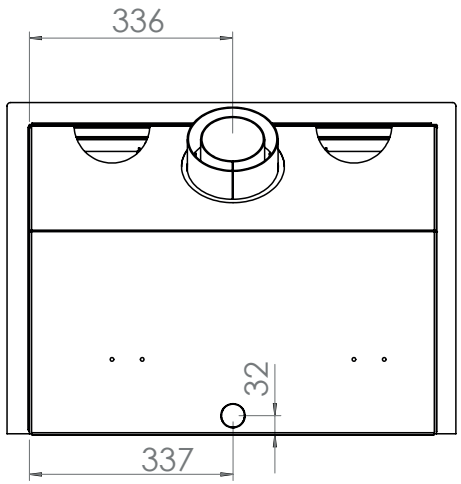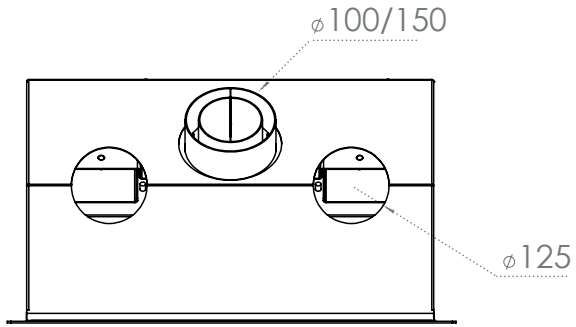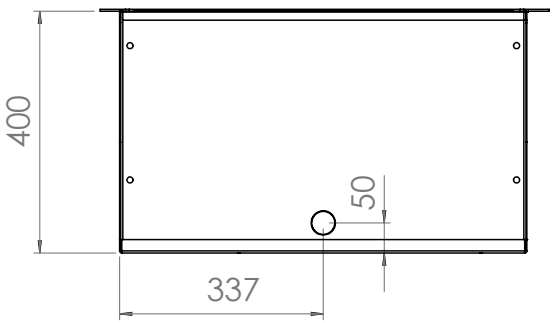
CARINO **67**